GLO-BALL C1

Jasper Morrison

FLOS

www.flos.com

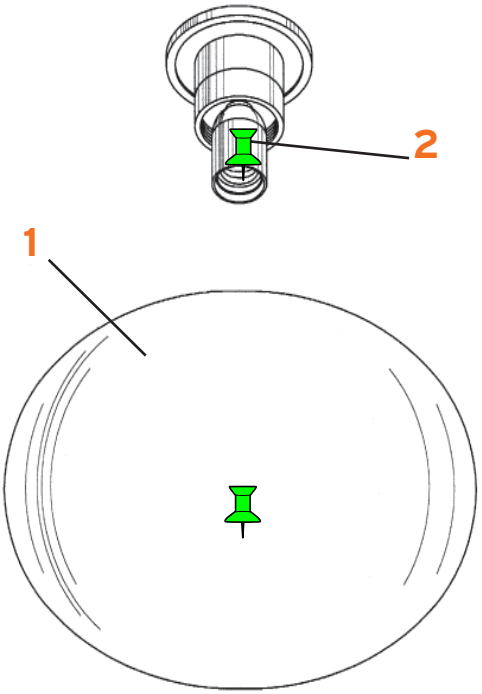

1. Diffusore 1 bianco/grigio :: White/grey diffuser 1 — F3050061
2. Assieme portalampada :: Lampholder assembly — RF2500200